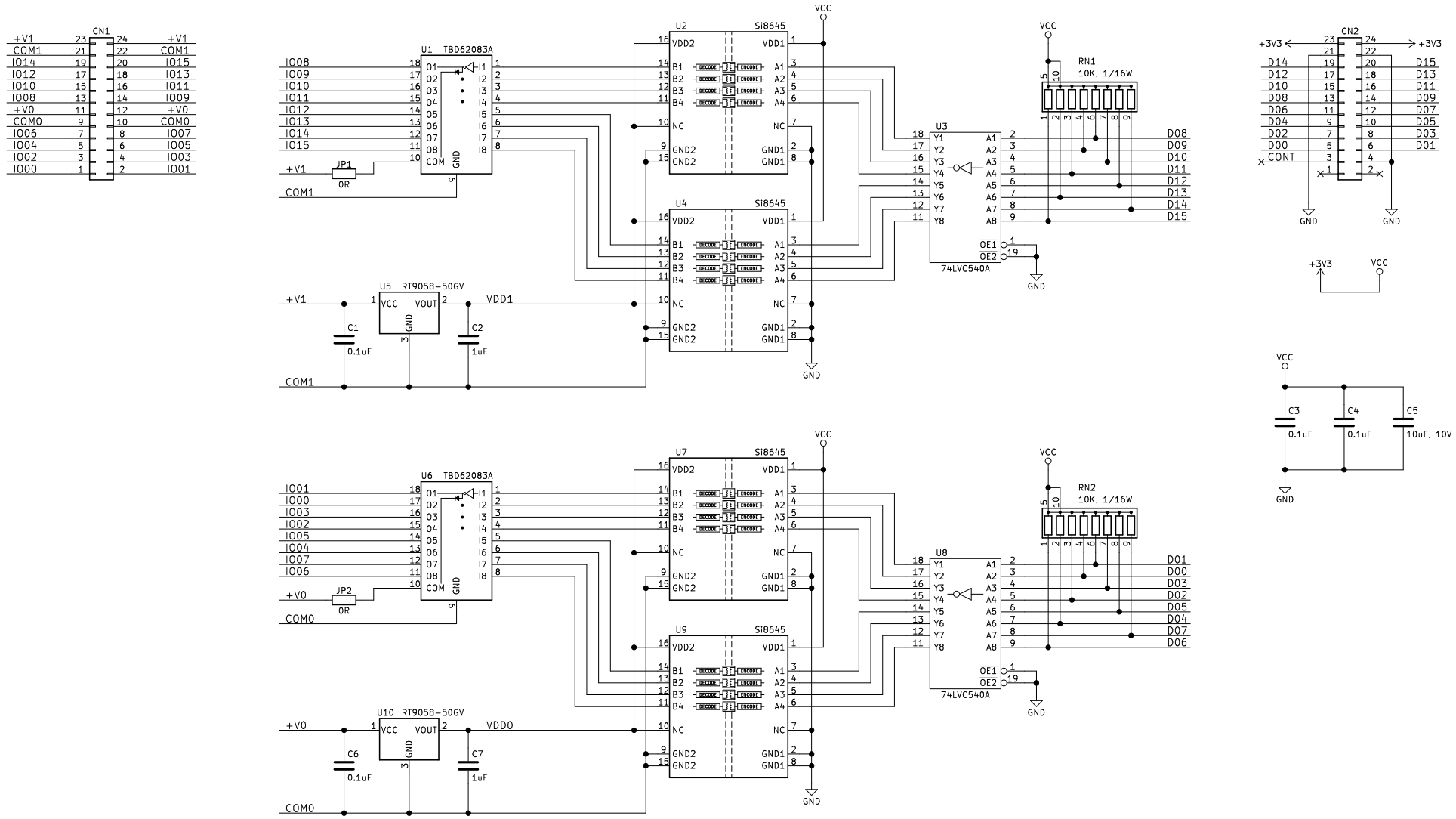

TITLE	REV
Digital Output Module	
DATE 2019-11-01	DOCUMENT NUMBER S1MOD1002-SCH
DESIGNED BY T.Matsuda	SIMGICS Simple Logic Sysytems LTD.
	SHEET 1 / 1